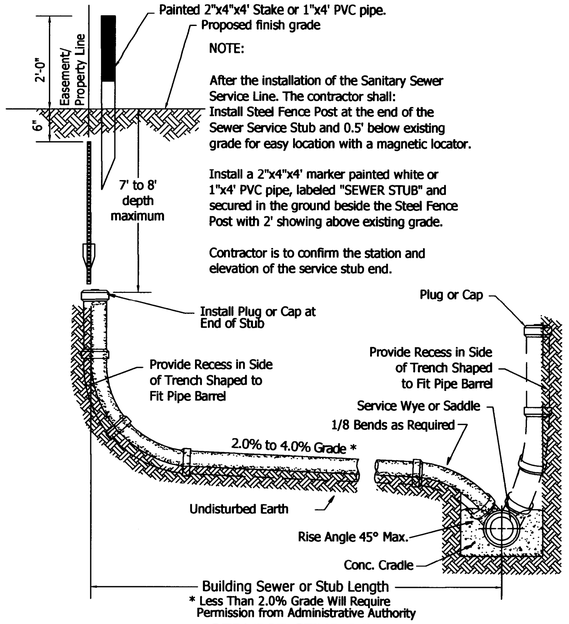

NOTE:

After the installation of the Sanitary Sewer Service Line. The contractor shall: Install Steel Fence Post at the end of the Sewer Service Stub and 0.5' below existing grade for easy location with a magnetic locator.

Install a 2"x4"x4' marker painted white or 1"x4' PVC pipe, labeled "SEWER STUB" and secured in the ground beside the Steel Fence Post with 2' showing above existing grade.

Contractor is to confirm the station and elevation of the service stub end.

SERVICE STUB DETAIL

No Scale

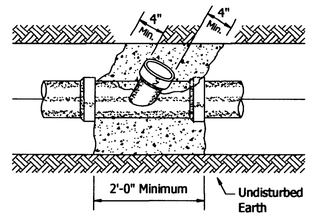

METHOD OF PLACING CONCRETE AT WYES AND SADDLES

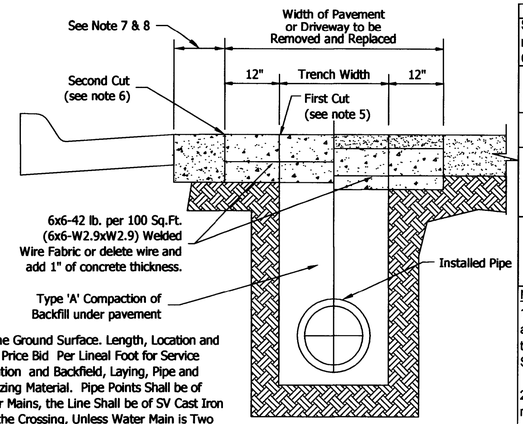

NOTE:
Maximum Depth of Plug Location Shall be 8' Below the Ground Surface. Length, Location and Elevation Shall be Determined by the Engineer. Unit Price Bid Per Lineal Foot for Service Stub or Building Sewer Shall Include: Trench Excavation and Backfield, Laying, Pipe and Fittings (SV.C.I. Pipe* if Required) and Trench Stabilizing Material. Pipe Points Shall be of Resilient Material. At Points Where Lines Cross Water Mains, the Line Shall be of SV Cast Iron Pipe for a Distance of Ten Feet Each Direction From the Crossing, Unless Water Main is Two Feet Above the Line.

* SV.C.I. Pipe is Required if There is Less Than 30" of Cover Over Pipe.

Class II, 3,000#, Concrete Cradle Shall be Placed at Each Wye or Saddle Location. The Bell of the Branch Section is to Be Within the Cradle. Cost of Cradling to be Included in the Price Bid for Wyes or Saddles.

Alignment Changes (Horz. & Vert.) to be Made With the Use of 1/8 Bends.

Bend and Riser Installation to be Field determined by the Engineer.

Service Stub Shall be Placed at Right Angle to the Main line.

SDR 35 PVC lines may be used in constructing Riser Pipes and Service Stub lines. Both Riser Pipes and Service Stub lines shall end in Schedule 40 PVC.

PAVEMENT PATCH METHODS		
Six methods of pavement patches shall be used dependent upon the original roadway surface type and traffic volumes. Schedule to be used unless authorized by City Engineer.		
ORIGINAL SURFACE TYPE	PAVEMENT PATCH METHOD	NEW PAVEMENT TYPE
CONCRETE	METHOD 1	8" Class I Concrete, 4,000 p.s.i.
	METHOD 2	6" Class I Concrete, 4,000 p.s.i.
ASPHALTIC CONCRETE	METHOD 3	8" Class I Concrete Base, 4,000 p.s.i. Plus 2" BM-2 Asphaltic Concrete
	METHOD 4	6" Class I Concrete Base, 4,000 p.s.i. Plus 2" BM-2 Asphaltic Concrete
BRICK	METHOD 5	8" Class I Concrete Base, 4,000 p.s.i. Plus One-Course Relaid Brick
	METHOD 6	6" Class I Concrete Base, 4,000 p.s.i. Plus One-Course relaid Brick

Notes:

1. Methods 1,3,and 5 shall be used on arterial, intersections, and other heavily traveled streets (see Major Street System Map).

2. Method 2,4, and 6 shall be used for residential streets.

3. Method 2 shall be used for driveway, alley and curb and gutter repairs also.

4. All concrete is to be 8 sack mix.

5. First Cut - This cut may be by rock saw or other means and shall be full depth of the existing pavement.

6. Second Cut - All pavement and driveway cuts shall be full depth without damage to adjacent pavement. This cut shall be straight and clean with a smooth edge. A rock saw may be used for second cut on asphalt pavement only, however a straight, semi-smooth edge shall be required.

7. If distance between Second Cut and any joint or edge of pavement is less than 24" pavement shall be removed to the joint or edge of pavement.

8. If 4' or less pavement width is removed from the outside edge of pavement a minimum of 4 feet must be removed & replaced. Subgrade preparation (Type 'A' Compaction min. 18" deep if outside of trench width) for replacement shall extend a minimum of 2' outside the proposed outside edge of pavement.

INSTALLATION OF PIPE UNDER EXISTING PAVEMENT

PIPE SIZE	A	B	MANDRELL O.D.**	RING O.D.
8	5.3"	6"	7.28"	6.57"
10	6.7"	6"	9.08"	8.37"
12	8.0"	8"	10.79"	10.08"
15	10.0"	9"	13.20"	12.49"

** 5% Deflection Mandrell (ASTM D 3034-81)

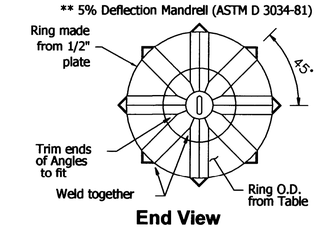

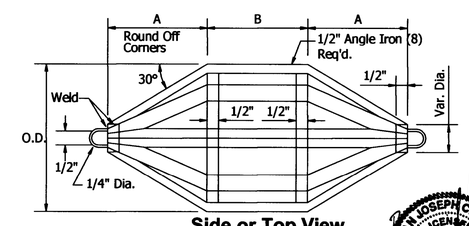

GO, NO-GO DEFLECTION TESTING MANDRELL

(Use for P.V.C. Pipe Deflection Test)

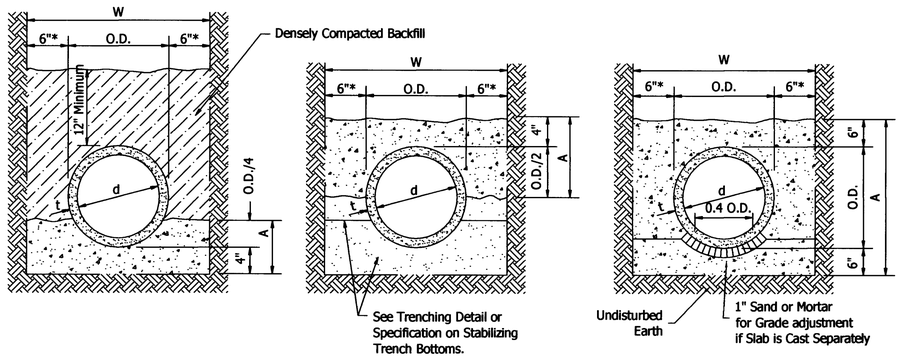

CONCRETE CRADLE

* Minimum Width

CONCRETE ARCH

* Minimum Width

CONCRETE ENCASEMENT

* Minimum Width

d	O.D.	t	W	CRADLE A		ARCH A		ENCASE. A	
IN.	IN.	IN.	IN.	IN.	CY/LF	IN.	CY/LF	IN.	CY/LF
8	9.5	.750	24	6.4	.036	8.8	.045	19.5	.102
10	11.75	.875	24	6.9	.037	9.9	.047	21.8	.107
12	14	1.00	26	7.5	.042	11.0	.054	24.0	.121
15	17.5	1.25	29.5	8.4	.052	12.8	.066	27.5	.147
18	21	1.50	33	9.3	.061	14.5	.079	31.0	.174
21	24.5	1.75	36.5	10.1	.071	16.3	.092	34.5	.203
24	28	2.00	40	11.0	.082	18.0	.106	38.0	.233
27	31.5	2.25	43.5	11.9	.094	19.8	.121	41.5	.264
30	35	2.50	47	12.8	.106	21.5	.136	45.0	.297
36	41.5	2.75	53.5	14.4	.130	24.8	.167	51.5	.361

SCHEDULE FOR CONCRETE CRADLE, CONCRETE ARCH AND CONCRETE ENCASEMENT FOR SANITARY SEWERS

Schedule Based on V.C.P. and Class II, 3,000 p.s.i., Concrete will be used for Cradling

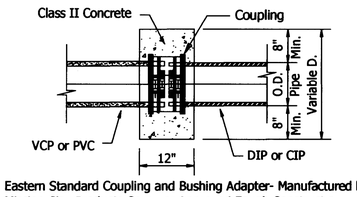

Eastern Standard Coupling and Bushing Adapter- Manufactured by Mission Clay Products Corp., or Approved Equal. Construct a Formed Block of Concrete Around the Connection as Detailed. Payment for Concrete Collars Necessary for Such Connection Shall be Subsidiary and Not a Separate Bid Item.

CONCRETE COLLAR DETAIL

No Scale

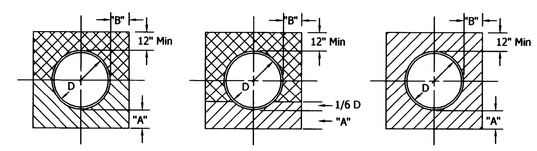

Class "B" Embedment (Pipe: RCP Optional)

Class "C" Embedment (Rigid Pipe)

Flexible Pipe Embedment (Pipe: PVC, DIP, Fiberglass, HDPE)

Table of Bedding Depths and Side Clearances				
	Flexible		Rigid	
D	A	B	A	B
4"-27"	6"	9"	9"	16"
> 27"	6"	9"	9"	18"

Hand Placed & Hand Tamped Select Earth Backfill
Granular Embedment
Concrete

D Nominal Pipe Size
A Fill Below Pipe (See Table)
B Side Clearances (See Table)

STANDARD EMBEDMENTS

No Scale

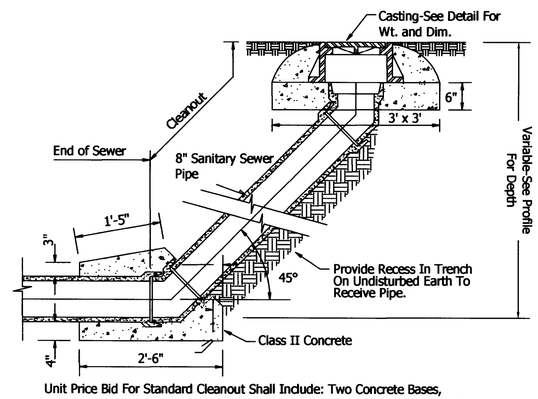

Unit Price Bid For Standard Cleanout Shall Include: Two Concrete Bases, Castings, Necessary 8" Pipe, Two 8" Bends, Trenching and Backfill, Complete In Place As Shown.

STANDARD CLEANOUT DETAIL

No Scale

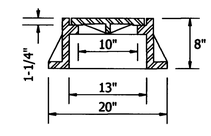

NEENAH Casting
No. R-1976 or Equal
Weight 95 lbs.

CLEANOUT CASTING DETAILS

No Scale

NO.	DATE	REVISION	BY	APP'D

STANDARD TRENCH DETAILS FOR SANITARY SEWER

City of Hutchinson

DRAWN BY: GTD
APPROVED BY: JSP

Date	Standard Detail	Sheet No.
10/15/2013	05	#### OF ####

P:\DWGS\STANDARDS\REVISED\Stnd05 SAN SEW TRENCH(NEW).dwg, 11/5/2013 9:42:00 AM, 1:0.5106